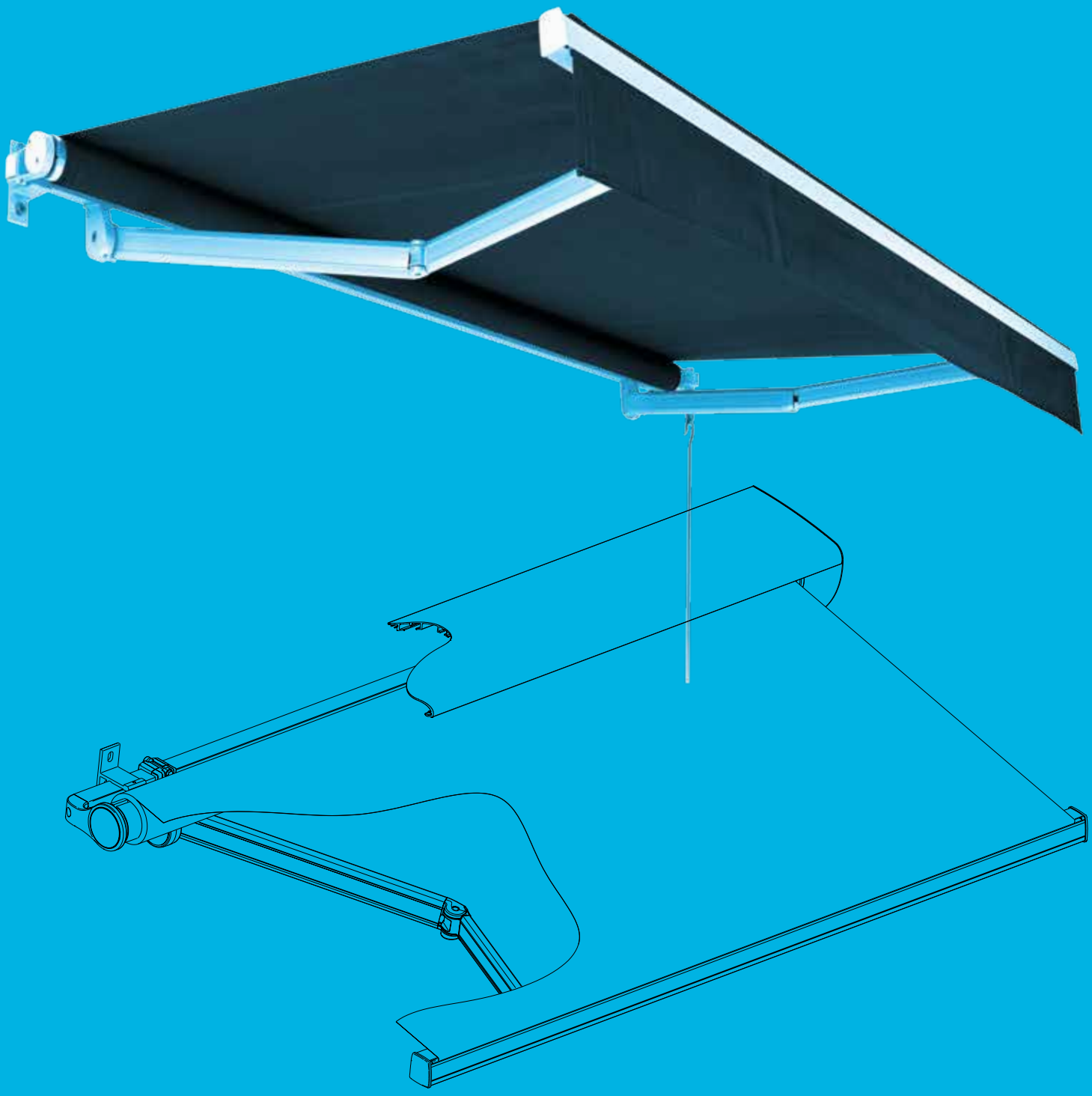

INSTALLATION MANUAL

TURNILS®

FA SERIES
FOLDING ARM AWNINGS

FA SERIES
FOLDING ARM AWNING
FABRICATION & INSTALLATION MANUAL

This Manual is only a guide to the measurement, installation and troubleshooting procedures for the FA Series Folding Arm Awnings which include:

- PICCOLO (FA 22)
- SIROCCO Classic (FA 42)
- SIROCCO Design (FA 44)
- SIROCCO Cross-Over (FA 45)
- SIROCCO Fabric Beam (FA 46)
- SIROCCO Semi-Cassette (FA 48)
- VIENTO Semi-Cassette (FA 58)

Hunter Douglas Limited does not warrant the accuracy contained in this manual.

Copyright 2017 Hunter Douglas Limited [ABN 98 009 675 709] • 08/17
® Registered Trade Marks of Hunter Douglas Limited
Dyneema is a registered Trade Mark of DSM IP Assets B.V • Somfy is a registered Trade Mark of Somfy SAS.
Turnils is a registered Trade Mark of Hunter Douglas Scandinavia AB.

FA40 SERIES

- Ensure that the awning is fixed to a sufficiently secure base.
- Warning for decayed wood, plaster that has crumbled away or brick and thin panel material.
- Check that windows can be opened after mounting the awning.
- The motor and any control equipment must be installed by an authorised electrician.

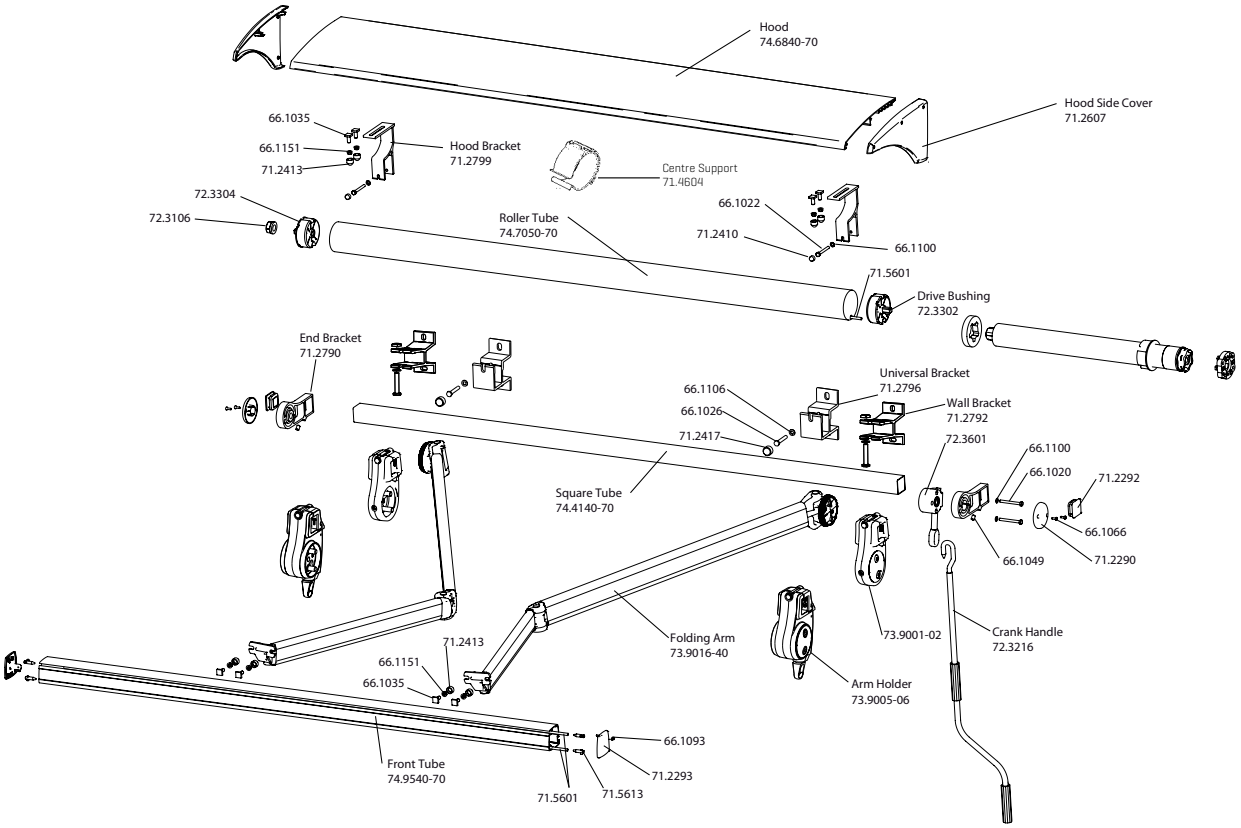

FA58

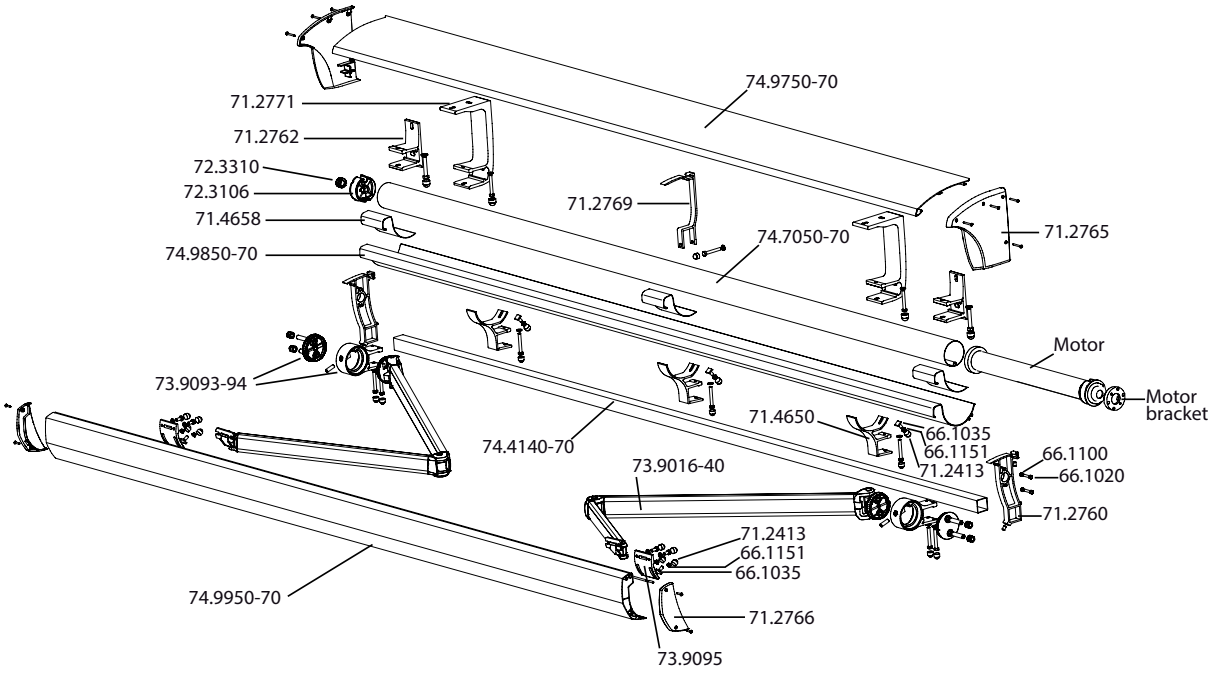

PRODUCT OVERVIEW

RANGE OF APPLICATION

FA-Series is a heavy-duty folding arm awning designed for terraces, bungalows, balconies, kiosks, shops, restaurants etc.

FA-Series with pitch control provides maximum shading comfort. The projection angle is infinitely adjustable from -5° to -40° just by rotating the pitch control eyelets with the crank handle.

OPERATION

External operation by gear or motor. Internal operation by motor. The motor can be completed with automatic controls, for example remote control or sun and wind sensors.

INSTALLATION

The awning can easily be installed directly onto the wall or under the eave. Flexible roof brackets available.

FOLDING ARMS

The arm components are manufactured with pressure die casted aluminium and the arm profiles of extruded aluminium. The Dyneema®-tape connection over both knee and arm brackets improve the stability of the awning. Heavy-duty springs provide an excellent tension of the fabric.

COMPONENTS

The installation brackets, end bracket and centre supports with brackets are manufactured with extruded aluminium. Gears are manufactured with pressure die casted zinc and the removable crank handle in steel. Bushings for roller tube 70, 71, and 78 mm are manufactured with pressure die casted zinc, bushings for roller tube 85 mm in polyamide.

End cap for front and square tube are manufactured with polyethylene, bushing in self lubricating polyamide.

Fasteners are manufactured with stainless steel, zinc plated steel or steel surface treated with Dacro 500 LC.

SIROCCO Series Awnings can in most versions be provided with a hood profile of extruded aluminium and with aluminium hood side covers and hood bracket in extruded aluminium. Joining piece in stainless steel.

PROFILES

The front tube and hood profile are manufactured with extruded aluminium.

Roller tube 70, 78 and 85 mm are manufactured with special zinc plated steel, roller tube 71 mm in extruded aluminium.

Square tube 35x35mm is manufactured with extruded aluminium.

Square tube 40x40mm is manufactured with special zinc plated steel.

COLOURS

Powder coated parts have colour code 0001 for white (RAL9010), 0182 for silver and 0914 for black.
Pigmented plastic parts have colour code 0001 for white (RAL9010), 0182 for silver and 0049 for black. Untreated or galvanized parts have colour code 0000. Crank handles in RAL7035 only.

DIMENSIONS (FA 22)

Projection (m): 1, 1.5, 2, 2.5 and 3m
Max width:
- Unit: up to 5m width at 3m projection.
- Extension: up to 15m width.

DIMENSIONS (FA 42)

Projection (m): 1.6, 2, 2.5, 3, 3.5 and 4m
Max width:
- Unit: up to 7m width at 4m projection.
- Extension: up to 15m width.

DIMENSIONS (FA 44)

Projection (m): 1.6, 2, 2.5, 3, 3.5 and 4m
Max width:
- Unit: up to 7m width at 4m projection.
- Extension: up to 15m width.

DIMENSIONS (FA 45)

Projection (m): 1.6, 2, 2.5, 3, 3.5 and 4m
Max width:
- Unit: up to 4.6m width.

DIMENSIONS (FA 46)

Projection (m): 1.6, 2, 2.5, 3, 3.5 and 4m
Max width:
- Unit: 7m width at 4m projection.
- Extension: up to 15m width

DIMENSIONS (FA 48)

Projection (m): 1.6, 2, 2.5, 3 and 3.5m. Max width:
- Unit: up to 7m width at 3.5m projection.
- No Extension available

DIMENSIONS (FA 58)

Projection (m): 1.6, 2, 2.5, 3, 3.5m and 4m Max width:
- Unit: up to 7m width (6m at 4m projection).
- Only Motorised
- No Pitch Control, No Roller Valance

ROLLER VALANCE

The Roller Valance option cannot be extended. Therefore, it can be used up to 7m width maximum.

INSTALLING THE AWNING

Place the awning in front of the installation site and measure out the height for the external brackets.

These must sit as close to the arm's attachment on the supporting tube as possible. Mark out and drill the holes for these brackets (NOTE! the wave line). Mount the brackets using the requisite plugs and screws.

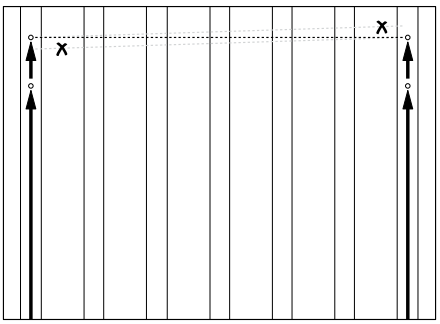

Stretch a piece of string between the outer brackets, mark and drill the holes for the other brackets.

Keep in mind to place the brackets at the correct height so that the awning has a ground clearance at the front edge of 2.0 - 2.2 metres.

Place the awning in the brackets with the supporting profiles. Lock the supporting profile using the bracket screw.

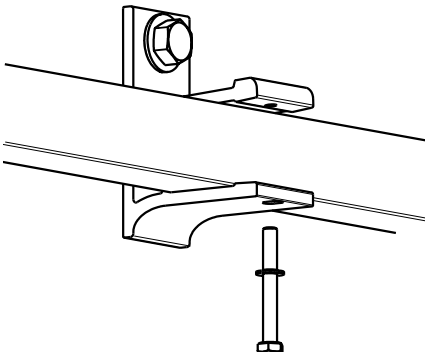

Universal Bracket

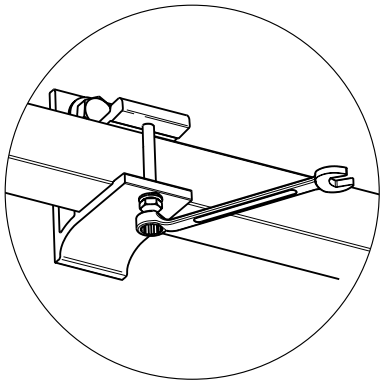

Roof Brackets 5-45°

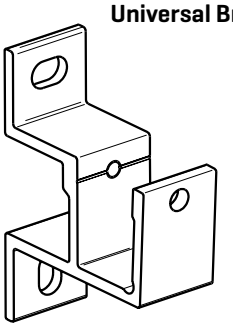

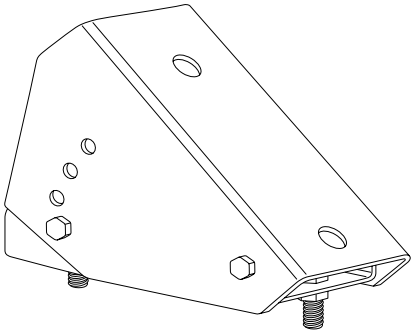

Wall Brackets

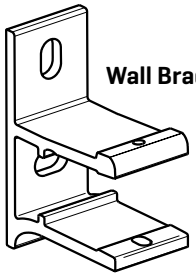

Spreader Plate



If face-fixed to masonry, there must be at least seven courses of bricks above the mounting position.

The spreader plate is used with support tube awnings to spread the load over three courses of bricks. A minimum of four bricks below the spreader plate is recommended.

ROOF BRACKETS

Roof bracket sets may be used to suspend the awning from rafters. Tiles must be pushed back for access. The rafter bracket is then bolted to the rafter so that the mounting surface sits on the eaves lining. The awning mounting bracket has a plate that is adjustable to suit the angle of the rafter from 5º - 45º. The universal bracket can then be installed to the roof bracket.

Alternatively, the fascia bracket can be used to gain even more height and install an awning on the outside of the gutter. See sketch.(Use with standard wall bracket).

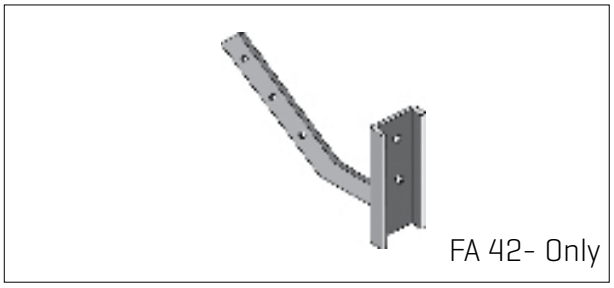

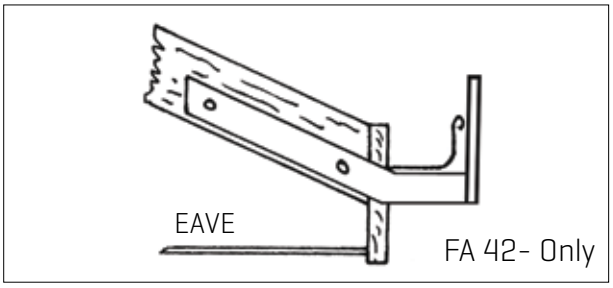

A. Mount the roof brackets to the roof using a bracket at each outer end of the roof.

   The remaining brackets are mounted at a max. 1.5 metre distance from each other and distributed evenly over the awning roof.

   Screw on the nuts loosely so that the roof can be adjusted when it is in place.

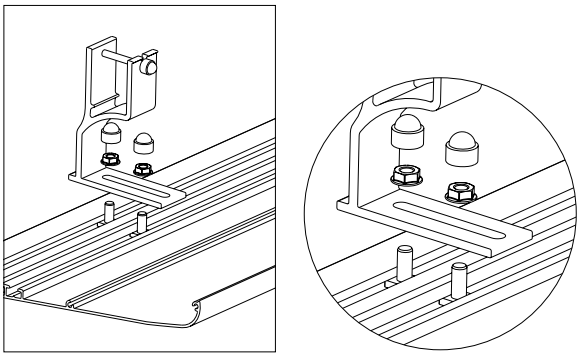

B. Mount the roof to the square tube and tighten the screws.

   Then move the roof bracket downwards so that the screw ends up on the underside of the square tube.

   Now lock the roof bracket to the square tube using the screw.

   Adjust the roof at the side and against the wall, then tighten the screws.

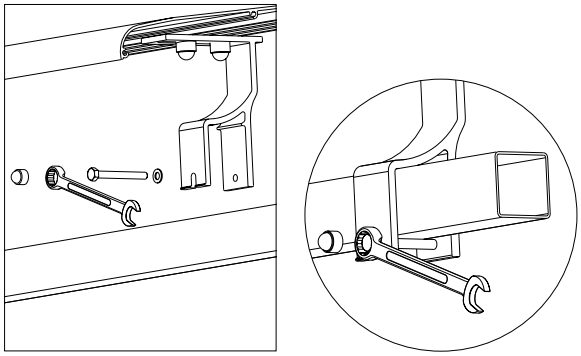

C. Screw the ends to the roof's screw pockets once the roof has been mounted.

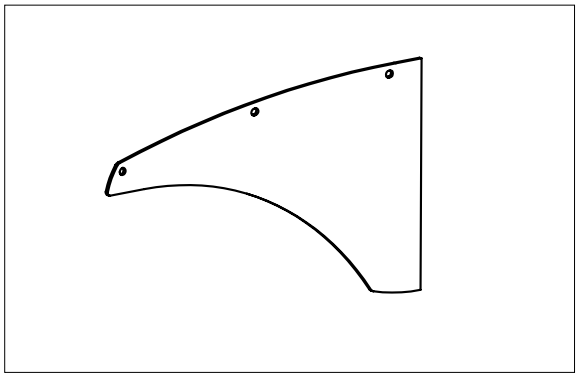

A. Mount the roof brackets to the roof using a bracket at each outer end of the roof.

   The remaining brackets are mounted at a max. 1.5 metre distance from each other and distributed evenly over the awning roof.

   Screw on the nuts loosely so that the roof can be adjusted when it is in place.

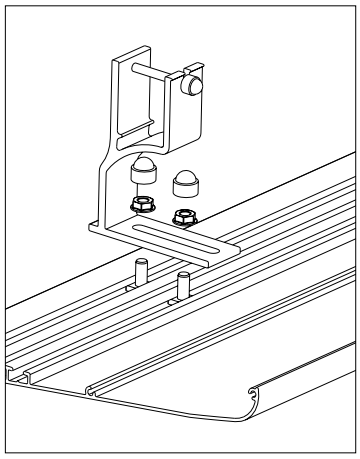

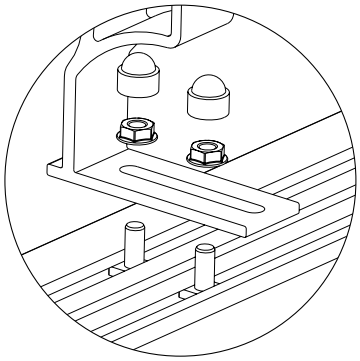

B. Mount the roof to the square tube and tighten the screws.

   Then move the roof bracket downwards so that the screw ends up on the underside of the square tube.

   Now lock the roof bracket to the square tube using the screw.

   Adjust the roof at the side and against the wall, then tighten the screws.

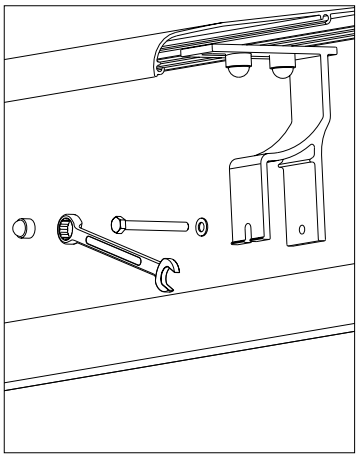

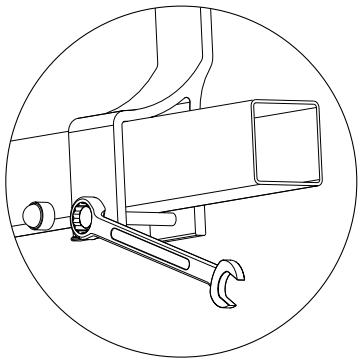

C. Screw the ends to the roof's screw pockets once the roof has been mounted.

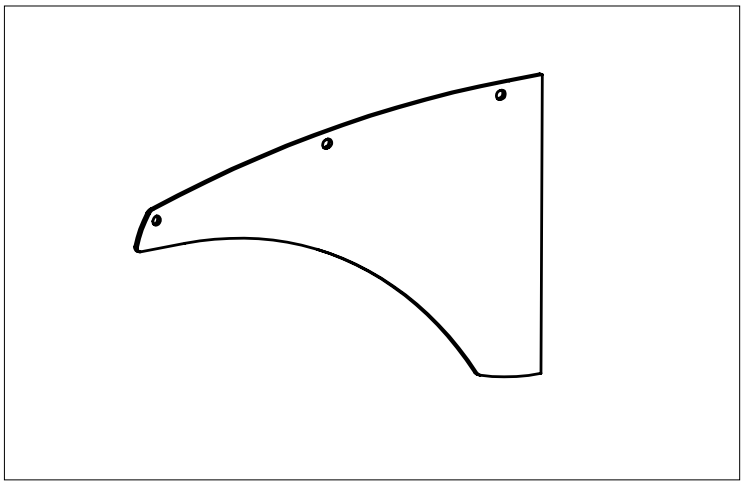

BOLTS REQUIRED FOR MOUNTING

▪ Standard Wall/Universal Bracket	2	12mm x 75mm coach bolts & flat washers
	2	12mm x 75mm dyna-bolts
▪ Rafter Bracket Set - FA 22/FA 42 Only	2	10mm x 75mm Hex bolts (fully threaded), nuts & spring washers - brick fix
	2	10mm x 40mm Hex bolts (fully threaded), nuts & spring washers - wood fix
▪ Fascia Bracket- FA 22/FA 42 Only	2	10mm x 75mm Hex bolts (fully threaded), nuts & spring washers

FA 42, FA 44 & FA 46 - INSTALLATION OF CENTRE SUPPORT
The centre supports should be assembled over the sewing joints which are located closest to the centre of the awning. Adjust the angle of the centre support so that the fabric does not touch its lower or upper lip.

ALL - FABRIC
Fabric requirement at projection: arm projection + 250mm excluding valance.

FA 48 - POSITION OF FABRIC ONTO ROLLER TUBE
The fabric should be positioned 40 mm from the edge of bushing on the roller side, to come straight into the cassette.

FA 58 - POSITION OF FABRIC ONTO ROLLER TUBE
The fabric should be positioned 25 mm from the edge of bushing on the roller side, to come straight into the cassette.

FA 22, FA 42, FA 44, FA 45 & FA 46 - HOOD
The hood brackets should be assembled 600mm from the end bracket. Max distance between hood brackets 1500mm.

SPECIAL INSTRUCTION FOR AWNING WITH THREE FOLDING ARMS
The folding arm in the middle should not have any spring tension in the connection between the folding arm and arm bracket. Remove the spring tension in the centre arm at the arm connection at the square tube. Remove the pin that holds the Dyneema®-tape with a small flat-headed screwdriver.

FABRICATION GUIDELINES

FA 22
No of installation bracket per width and projection

projection	Width (m)	≤3m	≤4m	≤5m
	1.0m	2	2	2
	1.5m	2	2	4
	2.0m	2	4	4
	2.5m	4	4	4
	3.0m	4	4	4

FA 42, FA 44, FA 45, FA 46, FA 48 & FA 58
No of installation bracket per width and projection

projection	Width (m)	≤4	≤5	≤6	≤7
	1,6 m	2	2	4	6
	2,0 m	2	2	4	6
	2,5 m	2	4	4	6
	3,0 m	4	4	4	6
	3,5 m	4	4	5	6
	4,0 m	4	5	5	/

The awning width is defined as the total horizontal length of the awning excluding hood.
The arm brackets should be assembled 1/6 of the total width, from the end bracket, when the combination of projection and width allows.

MOTORISED AWNINGS

The limit switches should be adjusted to allow the awning to reach its maximum extension with the cover held taut, and to retract fully without straining the mechanism.

Fix the wind sensor to its bracket in a vertical position and install it in an exposed position, as close as possible to the awning. When using a wind sensor with several awnings/screens, install the sensor in a place where it will be exposed to maximum wind effect.

NOTE:
It is possible to connect one (1) single wind sensor to several controllers (please contact us). But you cannot connect several wind sensors to one (1) single controller.

Fix the sun sensor to its bracket in a vertical position and install it with the sensor facing the sun.

NOTE:
Use coupling device module when connecting several sun sensors to one (1) single controller. Ask for specific wiring diagram.

The sun control can most conveniently be checked under sunny conditions by alternately exposing the sensor to the sunlight and shading it. The wind control can be checked by blowing vigorously on the anemometer paddles.

ADJUSTMENT OF PROJECTION ANGLE (FA22, FA40 SERIES)

A. The awning's projection angle is adjusted with the stop screw and the screw located in the arm holder. Crank out/roll out the awning.

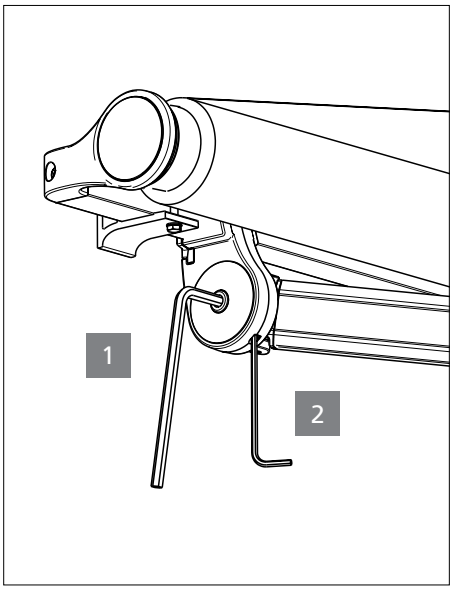

Adjust one arm at a time. Loosen the arm bracket screw (1) one to two turns.

⚠ Do not loosen the arm bracket screw more than 3 complete turns.

When adjusting, lift the arm so that the stop screw (2) is not stressed.
(NOTE! There may be a bang when the arm is lifted and the conical washer loosens.)

Adjust the stop screw (2) so that the arm has the desired height position.
The recommended minimum inclination is 10 degrees.

- If the stop screw is screwed in then the arm will be raised.
- If the stop screw is screwed out then the arm will be lowered.

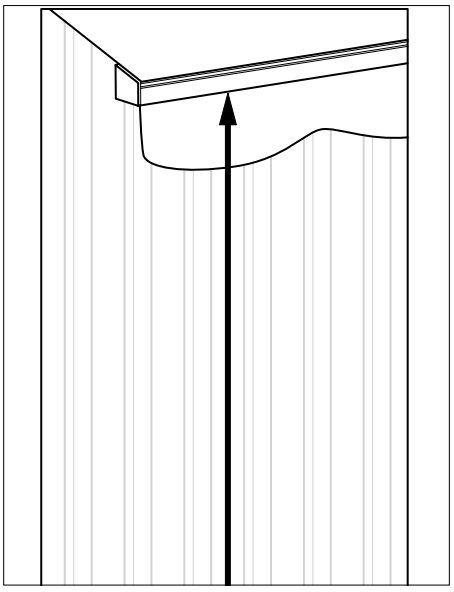

Tighten the screw (1) in the arm bracket slightly. The other arms are adjusted in the same way.
A ground clearance of 2.0 - 2.2 metres at the front edge of the awning is recommended.
Roll in the awning. Tighten the screw (1) thoroughly.

B. Roll out and roll in the awning several times, check that it looks right and functions correctly.

ADJUSTMENT OF PROJECTION ANGLE (FA58 SERIES)

A. The awning's projection angle is adjusted with the stop screw and the nuts located in the arm holder.
Crank out/roll out the awning. Adjust one arm at a time. Loosen the arm bracket screws (1) one to two turns.

⚠ Do not loosen the arm bracket screw more than 3 complete turns.

When adjusting, lift the arm so that the stop screw (2) is not stressed.
(NOTE! There may be a bang when the arm is lifted and the conical washer loosens.)
Adjust the stop screw (2) so that the arm has the desired height position.
The recommended minimum inclination is 10 degrees.
- If the stop screw is screwed in then the arm will be raised.
- If the stop screw is screwed out then the arm will be lowered.
Tighten the nuts (1) in the arm bracket slightly. The other arms are adjusted in the same way.
A ground clearance of 2.0 - 2.2 metres at the front edge of the awning is recommended.
Roll in the awning.
Tighten the nuts (1) more (min 50Nm)

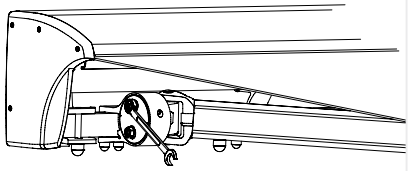

1

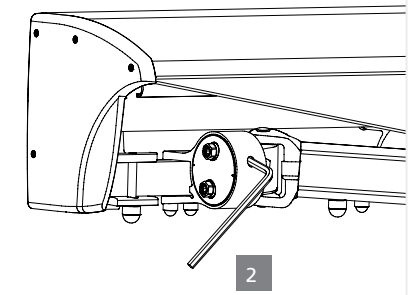

2

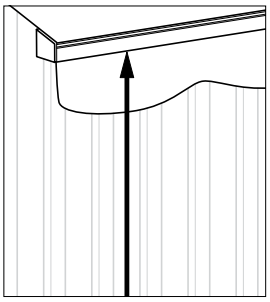

B. Roll out and in the awning several times, check that it looks right and functions correctly.

ADJUSTMENT OF FRONT PROFILE (FA58 SERIES)

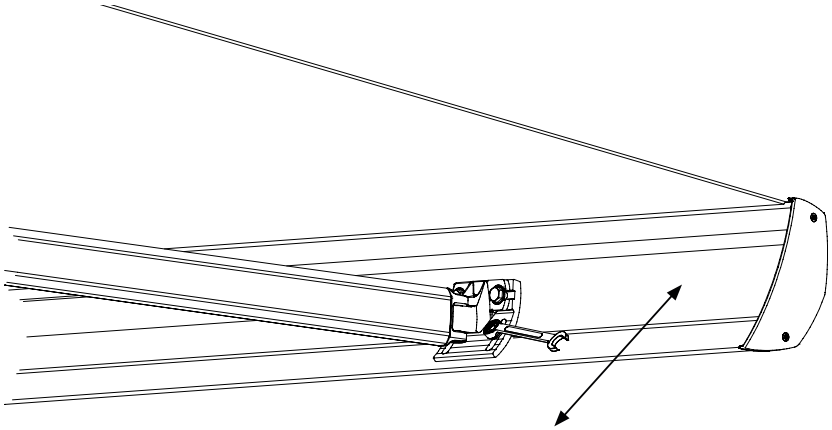

To receive the correct postion of the front profile, the front profile is adjusted as follows:
Roll out the awning until the fabric slackens. Mark position of bracket to ensure you maintain the bracket position sidewise.

Unscrew the two bottom nuts on the adjustment bracket, holding the front profile.

NOTE! Do not remove the nuts completely.

Move the front profile up or down until receiving the correct position when rolled in.

Fasten the screws.

OPERATING AND MAINTENANCE INSTRUCTIONS FOR AWNINGS

CLEANING:
The frame and the fabric are subjected to dirt and pollution and should be cleaned at least once a year in order to retain their high finish. This is particularly important in more exposed installations, e.g. environments near the sea. Use a soft cloth, tepid water and a mild cleaner. Do not use a high-pressure washer as it can damage the awning fabric and any electrical equipment, etc. For a detailed description of cleaning the fabric, please refer to its usage instructions.

REMOVAL OF THE AWNING'S VALANCE:
The valance is the most exposed part of the awning. To increase the valance's lifespan it can be stored indoors during the winter months. First loosen the front profile's left or right end cover. Then loosen the valance's fabric lock. Move the valance to the side so that it slides out from the front profile. Put back the end cover and store the valance indoors.

CHANGING THE AWNING FABRIC:
Before changing the awning fabric, it is recommended to contact the company from which the awning was purchased to arrange an inspection of the frame. This company can provide more information about changing the fabric and also provide advice in case some other component may need to be replaced in order for the awning to maintain its finish and function.

WARNING - ALWAYS ALLOW A PROFESSIONAL TO ADJUST THE FOLDING ARMS:
An awning has very powerful springs inside the arm's aluminium profiles. If the arm is loosened without first being secured, it can cause serious personal injury and in the worst case death. The arms must therefore always be adjusted by a professional.

WARNING - ALWAYS ALLOW A PROFESSIONAL TO LOOSEN THE AWNING'S END COVER:
The awning's end cover may need to be loosened when changing gears, the motor or the fabric. If the awning's end cover is loosened without all of the awning's arms being secure, the arms can cause serious personal injury and in the worst case death. The awning's end covers must therefore always be loosened by a professional.

WARNING - ROLLING OUT THE AWNING:
When washing windows, painting the facade, or carrying out maintenance or repair of the awning, there are risks, e.g. the ladder tipping over if the awning is rolled out when the work is being carried out. You should therefore keep the awning rolled up when work is being carried out near the sun protection. The automatic mechanisms on motorised awnings must be shut off in order to avoid unintentional operation.

Also make sure that the awning cannot make portable infrared or bottled gas heaters tip over or come into contact with other objects that could damage the awning or cause other injuries.

NOTES